IWAKI PUMPS

IWAKI
Pneumatic Drive Bellows Pump

SB series

Instruction Manual

⚠ Read this manual before use of product

Thank you for selecting an Iwaki SB series pneumatic drive bellows pump.
This manual describes “Safety Instructions”, “Outline of Product”, “Installation”, “Operation” and “Maintenance”. Be sure to read this manual thoroughly and carefully to use the product without fail for a long time.

Contents

Page

Safety instructions 1, 2
Outline of product
1. Unpacking and inspection 3
2. Operating principle 3
3. Model identification 4
4. Specification 5
5. Dimension 6, 7
6. Main parts and label 7
7. Parts name and construction ..... 8 - 11
Installation
1. Before use 12
2. Installation and piping 13, 14
Operation
1. Operation and adjustment ..... 15 - 17
Maintenance
1. Troubleshooting 18
2. Maintenance and inspection 19
3. Consumable parts 19
EC DECLARATION OF CONFORMITY 20
Waste Electrical and Electronic Equipment (WEEE) 20

Important Instructions

For the Safe and Correct Handling of the Pump

- "Safety Instruction" section deals with important details about handling of the product. Before use, read this section carefully for the prevention of personnel injury or property damage.
- Observe the instructions accompanied with "WARNING" or "CAUTION" in this manual. These instructions are very important for protecting pump users from dangerous situations.
- The symbols on this instruction manual have the following meanings:

⚠ **WARNING**	**Nonobservance or misapplication of the contents of “Warning” section could lead to a serious accident which may result in death.**
⚠ **CAUTION**	**Nonobservance or misapplication of the contents of “Caution” section could lead to personal injury or property damage.**

Types of Symbols

⃠	Indicates a prohibited action or procedure. Inside or near this circle, a concrete and practical image of the activity to be avoided is depicted.
!	Indicates an important action or procedure which must be performed or carried out without fail. Failure to follow the instructions herein can lead to malfunction or damage to the pump.

⚠ Export Restrictions

Technical information contained in this instruction manual might be treated as controlled technology in your countries, due to agreements in international regime for export control.
Please be reminded that export license/permission could be required when this manual is provided, due to export control regulations of your country.

Safety Instructions

⚠ Warning

- **Turn off the power supply.**
  Working without disconnecting the power supply may cause an electrical shock. Before engaging upon any working procedures involving the pump, make sure to turn the power supply switch off and to stop the pump and other related devices.

Electrical shock

- **Terminate operation.**
  When you detect or become aware of a dangerous sign or abnormal condition during operation, terminate the operation immediately and start it from the beginning again.

- **For specified application only.**
  The use of a pump in an application other than those clearly specified may result in injury of person or damage to the pump. Use the pump strictly in accordance with the pump specifications and application range.

Prohibited

- **No remodeling.**
  Never remodel a pump. Otherwise, a serious accident may result. Iwaki will not be responsible for any accident or damage of any kind which is caused by the user remodeling the pump without first obtaining permission or instructions from Iwaki.

No remodeling

- **Wear protectors.**
  If you touch or come in contact with any type of hazardous chemical liquid, including but not limited to chemicals, you may experience a serious injury. Wear protective gear (protective mask, gloves, etc.) during disassembly, assembly or maintenance works are done.

Wear protectors

⚠ Caution

- **Qualified operators only.**
  The pump operator and pump operation supervisor must not allow any operators who have little or no knowledge of the pump to run or operate the pump. Pump operators must have enough knowledge of the pump and its operation.

Prohibited

- **Do not drain the liquid on the floor.**
  The liquid discharged out of the pump, must be drained into a special container. Never drain the liquid directly onto the floor.

Prohibited

- **Spill-out accident.**
  Protective measures should be taken against any accidental spill-out or leakage of the pumped liquid as a result of unexpected damage on the pump or the related piping.

Caution

- **Ventilate.**
  If toxic or odorous liquid is handled, poisoning may result during an operation. Ventilate the operating site sufficiently.

Caution

- **Limited operating site and storage.**
  Do not install nor store the pump in the following places:
  * Places where a flammable gas or powder is generated.
  * Places where corrosive gas (chlorined gas etc.) is generated.

Prohibited

⚠ Caution

- **Disposal of used pump.**
  Dispose of any used or damaged pump in accordance with local rules and regulations. See page 20 to comply with the European Directive 2012/19/EU on waste electrical and electronic equipment.

- **Returning of pump.**
  Wash and clean pump before you return it to us.

- **Do not pinch your fingers.**
  Bellows makes reciprocating movement. You may pinch your fingers in the bellows if you touch it. Install pump in the equipment and take measures for fingers not to touch it.

- **Countermeasure for static electricity.**
  When low electric conductivity liquid such as ultra-pure water and fluor inactive liquid (e.g.Fluorinert™) are handled, the static electricity may be generated in pump, which may cause static discharge and break down. Take countermeasure to avoid and remove static electricity.

Outline of product

1. Unpacking and inspection

After unpacking, check followings.

[1] Check nameplate if the product is ordered one.

Spec label for the European market

Spec label for any area other than the European market

*The CE marking on our product(s) is for us to market the product(s) into the European market, however, the CE marking does not ensure any safety or conformity of the product(s) outside the European market.
When the pump is incorporated into the equipment marketed in the European market, such equipment must meet all the requirements of applicable directives.
In such a case, any person who places the equipment on the market must carry a CE mark on the equipment as a manufacturer.

[2] Check if pump is not damaged or any bolt or nut are not loosened during transportation.

If you find any discrepancy, please contact your dealer.

2. Operating principle

IWAKI pneumatic drive bellows pump SB Series is specifically designed for semi-conductor manufacturing process application.
It makes reciprocating movement when air is supplied to its cylinder.
Synchronous with piston movement, bellows makes reciprocating movement to suck and discharge liquid.

(1) Suction stroke
When air supplied to front side of pneumatic cylinder, piston goes backward and bellows expands to suck liquid in bellows.

(2) Discharge stroke
When air is supplied to back side of pneumatic cylinder, piston goes forward and bellows shrinks to discharge liquid.

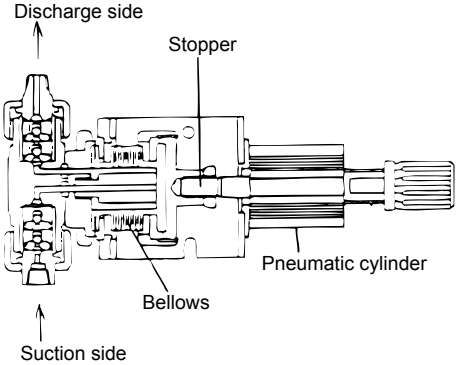

3. Model identification

SB - 2 S H - M K - S
(1) (2) (3) (4) (5) (6)

(1) Pump size (Max. discharge capacity)
2 : 5 mL/stroke
3 : 8 mL/stroke
4 : 15 mL/stroke
5 : 40 mL/stroke
6 : 100 mL/stroke

(2) Wet-end parts material
S : Stainless steel
T : Fluor plastics

Parts	S type	T type
Pump head	SUS304	PTFE
Valve	Hastelloy C-276	SiC
Valve seat	SUS304	PCTFE
Valve guide	SUS304	PTFE
Valve gasket	PTFE	
Bellows	PTFE	

Note : SB-4K, 5 and 6 are only available in S type.

(3) Direction of installation
H : For horizontal installation
V : For vertical installation

Note : SB-4K, 5 and 6 are only available in H type.

(4) Type of pneumatic cylinder
No symbol : Standard
M : with mechanical stopper
L : with switch
ML : with mechanical stopper and switch
Note : SB-4K is only available in M and ML types.
SB-5 and 6 are only available in standard and ML types.

(5) Code for viscosity of pumped liquid
No symbol : Standard type (Max. 150 mPa•s)
K : High viscosity type (Max. 500 mPa•s)
Note : K type is available for SB-4 only.

(6) Special version code
No symbol : Standard version
S : Special version

4. Specification

■ Pump specification

Model		SB-2	SB-3	SB-4	SB-4K	SB-5	SB-6
Max. discharge capacity (mL/stroke)		5	8	15		40	100
Max. discharge pressure (MPa)		0.05			0.1		
Max. stroke length (mm)		10	15	25	15	35	40
Supply air pressure (MPa)		0.15 - 0.4					0.15 - 0.5
Max. air consumption (NL/stroke)		0.02	0.03	0.05	0.14	0.2	1.0
Pump connection bore	Suction port	R 1/8					Rc 1/4
	Discharge port	R 1/8					Rc 1/4
Supply air connection bore		R 1/8					Rc 1/4

Note 1. Figures shown above are test performance with clear water at 25 deg. C.
(Discharge capacity changes depending on supply air pressure and discharge pressure.)
2. Figures of air consumption are based on supply air pressure of 0.3 MPa.
3. Permissible ambient temperature is 20 to 25 deg. C.
4. Refer to respective specification sheet for special version model.

■ Specification of switch (In case pneumatic cylinder types L and ML)

Voltage	24VDC	100VAC
Amperage	5 - 50mA	7 - 20mA
Internal drop voltage	2.4V or less	2.4V or less
Lamp	Light emitting diode (lit when ON)	
Lead wire length	1m (2-wire oil resistant PVC code 0.2m/m2)	

Consult us if other switch than mentioned above is used.

■ Specification of suck-back unit (Optional accessory)

Specification

Suck-back capacity	0 - 0.1 mL
Control time	Adjustable
Drive power	Compressed air
Supply air pressure	0.15 - 0.2MPa
Seal method	Diaphragm
Pneumatic cylinder	Single acting type
Stroke adjustment	Manual
Connection bore	Rc 1/8"
Supply air connection bore	M5

Wet-end material

Parts	DA-SI type	DA-SI-S4 type
Pump head A	PTFE	SUS304
Diaphragm	PTFE	PTFE

5. Dimension

■ Pump body

• SB-TV, SV (2, 3, 4)

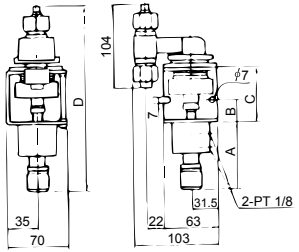

• SB-TH, SH (2, 3, 4)

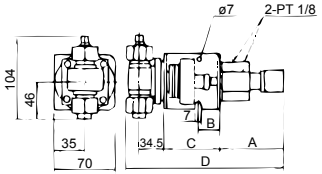

• SB-4K, 5, 6

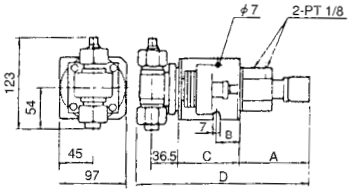

[mm]

Model	A	B	C	D	Mass (kg)
SB-2TV	94	25	61	236	1.1
SB-3TV	109	33	73	263	1.2
SB-4TV	139	39	84	304	1.3
SB-2SV	94	25	61	234	1.3
SB-3SV	109	33	73	261	1.4
SB-4SV	139	39	84	302	1.5
SB-2TH	94	25	61	208	1.0
SB-3TH	109	33	73	235	1.1
SB-4TH	139	39	84	276	1.2
SB-2SH	94	25	61	209	1.2
SB-3SH	109	33	73	236	1.3
SB-4SH	139	39	84	277	1.4

(Note) Dimensions are for ML type.

Model	A	B	C	D	Mass (kg)
SB-4K	130 (max)	29	79	260	2.3
SB-5	179 (max)	50	100	330	2.7
SB-6	211 (max)	-	151	415.5	7.6

(Note) Dimensions are for ML and MLK types.

■ Suck-back unit (DA type)

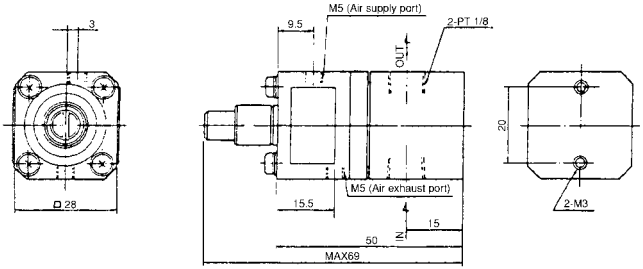

6. Main parts and label

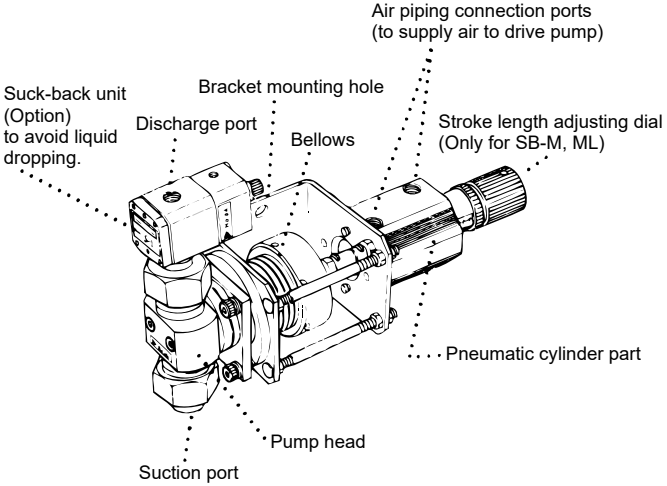

7. Parts name and construction

■ SB-2, 3, 4 (H type)

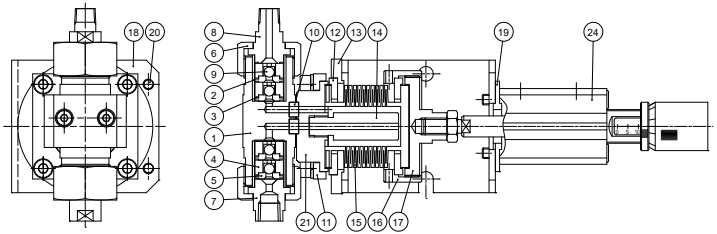

No.	Parts	Q'ty	Material	
1	Pump head A	1	S	SUS304
			T	PTFE
2	Valve case	2	S	SUS304
			T	CTFE
3	Valve gasket	10	PTFE	
4	Valve guide	4	S	SUS304
			T	PTFE
5	Valve seat	4	S	SUS304
			T	CTFE
6	Valve cap	2	S	SUS304
			T	PFA
7	Suction port	1	S	SUS304
			T	PTFE
8	Discharge port	1	S	SUS304
			T	PTFE
9	Ball valve (3/16”)	4	S	Hastelloy C276
			T	SiC
10	Gasket A	2	PTFE	
11	Flange B	1	S	SUS304
	Flange C		T	SUS304
12	Split flange	4	SUS304	
13	Flange	1	SUS304	
14	Stopper	1	S	SUS304
			T	PTFE
15	Bellows	1	PTFE	
16	Bellows holder	1	SUS304	
17	Bellows plate	1	SUS304	
18	Bracket	1	SUS304	
19	Spacer B	1	Polypropylene	
20	Stud bolt	2	SUS304	
21	Pump head B	1	S	SUS304
	Pump head T		T	PTFE
24	Pneumatic cylinder	1		

■ SB-2, 3, 4 (V type)

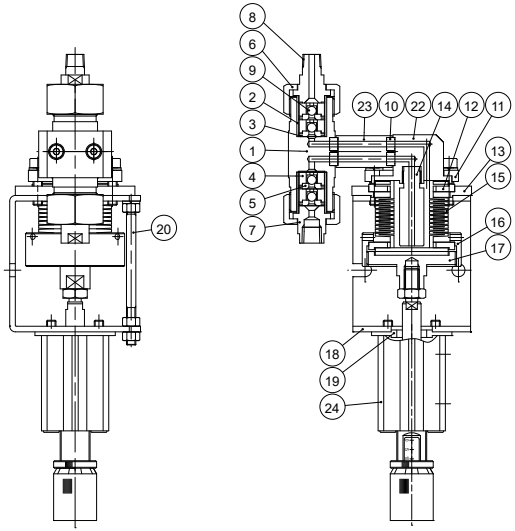

No.	Parts	Q'ty	Material	
1	Pump head A	1	S	SUS304
			T	PTFE
2	Valve case	2	S	SUS304
			T	CTFE
3	Valve gasket	10	PTFE	
4	Valve guide	4	S	SUS304
			T	PTFE
5	Valve seat	4	S	SUS304
			T	CTFE
6	Valve cap	2	S	SUS304
			T	PFA
7	Suction port	1	S	SUS304
			T	PTFE
8	Discharge port	1	S	SUS304
			T	PTFE
9	Ball valve (3/16”)	4	S	Hastelloy C276
			T	SiC
10	Gasket A	4	PTFE	
11	Flange B	1	SUS304	
12	Split flange	4	SUS304	
13	Flange	1	SUS304	
14	Stopper	1	S	SUS304
			T	PTFE
15	Bellows	1	PTFE	
16	Bellows holder	1	SUS304	
17	Bellows plate	1	SUS304	
18	Bracket	1	SUS304	
19	Spacer B	1	Polypropylene	
20	Stud bolt	2	SUS304	
22	Pump head C	1	S	SUS304
	Pump head F		T	PTFE
23	Spacer A	1	S	SUS304
			T	PTFE
24	Pneumatic cylinder	1		

■ SB-4K,5

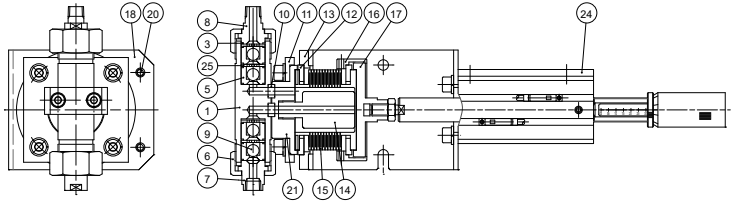

No.	Parts	Q'ty	Material
1	Pump head A	1	SUS304
3	Valve gasket	10	PTFE
5	Valve seat	4	SUS304
6	Valve cap	2	SUS304
7	Suction port	1	SUS304
8	Discharge port	1	SUS304
9	Ball valve (5/16”)	4	Hastelloy C276
10	Gasket A	2	PTFE
11	Flange B	1	SUS304
12	Split flange	4	SUS304
13	Flange	1	SUS304
14	Stopper	1	SUS304
15	Bellows	1	PTFE
16	Bellows holder	1	SUS304
17	Bellows plate	1	SUS304
18	Bracket	1	SUS304
20	Stud bolt	2	SUS304
21	Pump head B	1	SUS304
24	Pneumatic cylinder	1	-
25	Valve stopper	4	SUS304

■ SB-6SH

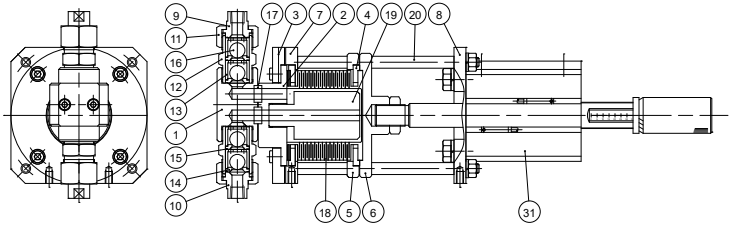

No.	Parts	Q'ty	Material
1	Pump head A	1	SUS304
2	Pump head B	1	SUS304
3	Flange	1	SUS304
4	Split flange	4	SUS304
5	Bellows holder	1	SUS304
6	Bellows plate	1	SUS304
7	Bracket A	1	SUS304
8	Bracket B	1	SUS304
9	Discharge port	1	SUS304
10	Suction port	1	SUS304
11	Valve cap	2	SUS304
12	Valve case	2	SUS304
13	Valve guide	4	SUS304
14	Valve seat	4	SUS304
15	Valve gasket	10	PTFE
16	Valve ball (1/2”)	4	Hastelloy C276
17	Gasket	2	PTFE
18	Bellows	1	PTFE
19	Stopper	1	SUS304
20	Stud bolt	4	SUS304
31	Pneumatic cylinder	1	-

Installation

1. Before use

⚠ Caution

- *Bellows of pump makes reciprocating movement. If your fingers are put on the bellows while pump is running, they may be pinched by the bellows and you may be injured.*

  Install pump inside the equipment.

- *Do not close pump discharge side*

  If pump is operated with discharge side closed, pressure inside pump increases resulting in pump failure. Never operate pump with discharge side closed.

(1) Open valve or cock in discharge side of pump to start pump.
(2) When high viscous liquid is pumped, discharge capacity is influenced by liquid viscosity, pipe diameter, pipe length and filter. It may take time to get desired discharge capacity.
(3) Discharge capacity changes according to supply air pressure and discharge pressure.
(4) Speed controller, solenoid valve and timer or so are needed to operate pump.
(5) Use following switch when it is mounted on pneumatic cylinder to which switch can be mounted.
Model of switch : T0H (made by CKD)
Lamp : Light emitting diode (lit when ON)
Number of switch : Two
Note: Consult IWAKI if other model than above is used.

(6) Dehumidified and dust-proofed clean instrumentation air must be used.
Air containing humidity, oil and dust may cause troubled operation.
(7) Pump noise
Air exhausting noise is generated when pump operates. Take sound-proofing measure if necessary.

Noise reference data JIS.Z.8731

Pump model	Supply air pressure	Pump stroke rate	Noise
SB-2 to 6	0.49MPa	2spm	60dB

2. Installation and piping

2.1 Installation

To use pump without trouble for a long time, install it referring to basic piping diagram shown below.

Basic piping diagram

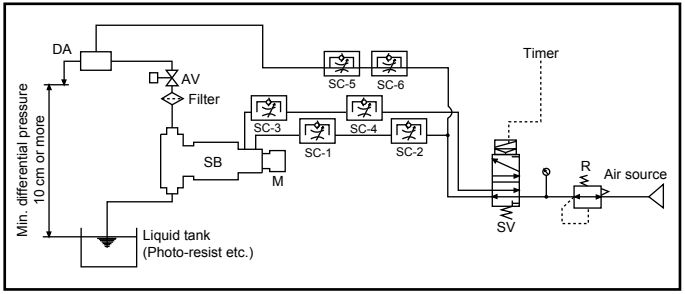

SB	: SB pump
M	: Mechanical stopper
DA	: Suck-back unit
SV	: Solenoid valve
R	: Regulator
SC	: Speed controller
SC-2, SC-3	: For adjusting discharge time of SB
SC-1, SC-4	: For adjusting suction time of SB
SC-5, SC-6	: For adjusting suck-back time
AV	: Air operate valve (Shut-off valve)

⚠ Caution

To avoid liquid dropping, install shut-off valve.

(1) Place to be installed
Install pump indoor and at place where maintenance works can be done easily.
(2) Position to be installed
Install pump as close to liquid vessel or tank as possible.
(3) Mounting direction
Mount pump with its discharge port up and with its valves coming vertical. Otherwise, pump performance may be decreased.
(4) Fix pump
Fix pump securely with M6 screws.

2.2 Liquid piping

(1) Size of pump discharge port and suction port:
R1/8, Rc1/8 thread (Rc1/4 for SB-6)
(2) Pipe connection
Firmly connect pipes so that air can not be sucked in nor liquid can not leaks.
Especially if suction side piping is not perfect, air is sucked in, which may cause decreased pump performance.
(3) Selection of joint and tube
Pay attention to the chemical resistance and pressure resistance of joints and tube when they are selected.
(4) Pipe resistance
Piping must be as short and less bends as possible to reduce pipe resistance of pumped liquid.

2.3 Air piping

(1) Size of air supply port of pump :
Rc1/8 (Rc1/4 for SB-6) thread. Connection of suck-back unit is M5 screw.

(2) Before air piping is done, clean pipe by flushing to remove rust or burr.

(3) Air must be dehumidified and dust-proofed clean instrumentation air.

(4) Speed controller is needed to adjust the time of discharge and suction as well as to adjust the suck-back time of suck-back unit. Use the controller available in the market and install it referring to the diagram on page 13.

2.4 Electrical wiring (for L or ML pneumatic cylinder types)

(1) Wiring of lead wires
Lead wires of switch must not be directly connected to power source but load must be connected in series.
In case it is used for DC, connect brown wire to “plus” side and blue wire to “minus” side. If connected in reverse, switch operates but lamp does not light.
In case it is connected to AC relay and programmable controller input, it may happen the switch lamp does not light if half-wave rectification is done in these circuits. In this case, connect switch lead wires in reverse polarity to light lamp.

(2) Contact point rating
Do not load the switch exceeding its max. contact point rating. Lamp may not light if current is below rated current figure.

(3) Protection of contact point
When it is used as induction load such as relay or so, be sure to install the protection circuit of contact point as shown on Fig. 1 and Fig. 2.

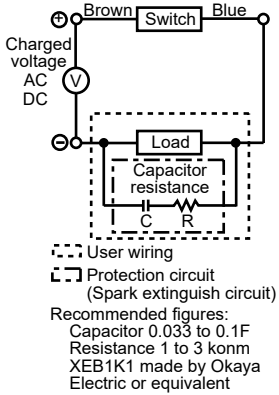

Fig. 1 When capacitor, resistor are used

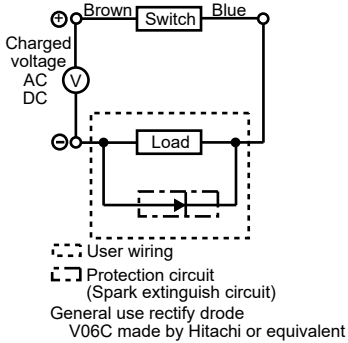

Fig. 2 When Diode is used

(4) Magnet atmosphere
Do not use the switch at the place where strong magnetic field exists near the switch or where strong electric current (big magnet or spot welder etc.) exists. In case cylinders with switches are closely installed in parallel or in case magnetized material passes near cylinder, they may interfere each other to affect the precision of detection.

Operation

1. Operation and adjustment

⚠ Caution

- *Bellows of pump makes reciprocating movement. If your fingers are put on the bellows while pump is running, they may be pinched by the bellows and you may be injured. Do not touch bellows while pump is running.*
- *Do not stop pump for a long time with the liquid filled in pump. The liquid may stick valves. When the pump is not used for a long time, clean and wash pump inside.*

1.1 Preparation for operation

(1) If shut-off valve is installed at discharge side, open it before starting pump.
(2) Adjust pressure of supplied air by pressure reducing valve.
(3) Set switching over time of solenoid valve by timer. (Refer to next item 1.4.2 “By pump speed adjustment”.)

1.2 Starting operation

Pump starts to operate as soon as air is supplied.
• Operate pump to remove air in pump and piping until liquid comes to discharge port end of pump.
• Check if liquid does not leak from pump or piping.

1.3 Stopping pump

To stop pump, stop mechanical valve after air was shut off.

1.4 Adjustment of discharge capacity

1. Adjustment of stroke length (for the pump with the mechanical stopper)
   (1) Turn the lock nut of the pneumatic cylinder clockwise.
   (2) Turn the stroke length adjusting dial to tune the stroke length to the desired length.
   (3) After adjustment is finished, turn the lock nut counter-clockwise and fix the dial.

⚠ Caution

Always turn the stroke length adjusting dial when the supply air pressure is NOT supplied to the pump or when it's in the discharge process. If the dial is adjusted when it's at the end of the suction process (where the pneumatic cylinder is fully pushed back and the bellows is fully expanded), the threads of the adjusting dial may break.

2. Adjustment of pump speed
   (1) Adjust the discharge and suction time by speed controller (SC-1 − SC-4).
   SB-2 − SB-4/4K : 1 cc/sec or below
   SB-5 : 4 cc/sec or below
   SB-6 : 10 cc/sec or below
   Note: Too fast speed may generate gas from liquid resulting in lowered pump performance. Cavitation may occur or pressure may be increased depending on piping length or handled liquid viscosity. In this case pump speed must be slowed down further more.
   (2) Adjust speed controller by opening it fully at first and then gradually closing it.
   Adjustment of suction time : SC-1, SC-4
   Adjustment of discharge time : SC-2, SC-3

3. Switching over of solenoid valve

(1) In case solenoid valve is switched over by timer

Set the timer for desired time to switch over the solenoid valve. If it is switched over at the middle of stroke, the deviation of discharge rate become large. It is recommended to adjust the timer so that the solenoid valve can be switched over at the stroke end.

(2) In case solenoid valve is switched over by switch signal of pneumatic cylinder

Note the pneumatic cylinder has a wide allowance to the switching point. This results in a change in stroke length thus flow rate per shot.

When stroke length is adjusted by mechanical stopper, the switch position should be also adjusted. Refer to the following item “Adjustment of position of pneumatic cylinder switch”.

Pneumatic cylinder switch employs contact point lead switch. In case each relay is taken from common power source, the life of contact point may be shortened by excessive current or voltage due to noise or counter electromotive force. Refer to the item “Electrical wiring”.

4. Adjustment of position of pneumatic cylinder switch

(1) Moving range of switch

Moving range means the range between the switch is ON by piston movement and is OFF by its further movement to the same direction. The centre position of the movement range is the most sensible position. If the piston is set to be stopped at this position, it is hard to be disturbed by external factors resulting in obtaining stable switching.

(2) Response distance of switch

Response distance means the distance between the position where the switch is ON by piston movement and the position where the switch is OFF by reverse movement of piston. If the piston stops in the middle of the response distance, switch movement becomes unstable and apt to be affected by external factors.

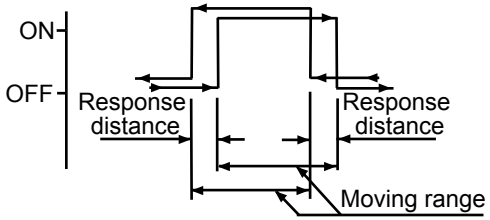

(3) Switch mounting position

a. Stroke end mounting

To operate switches at the most sensible position, mount switches at pump side RD and opposite side HD respectively. Mount the switches so that the lead wires come inside direction.

b. Middle position mounting

In case to stop piston in the middle of stroke, fix the piston at the position to be topped and move switches back and forth on the piston to find the position each switch gets ON first. The middle of the two positions is the most sensible position where the switches must be mounted.

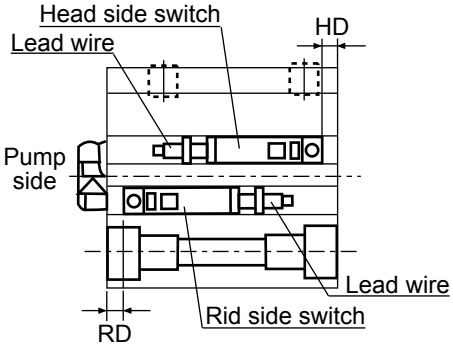

1.5 Adjustment of suck-back unit

This is the device to avoid liquid dropping from discharge piping (discharge end).

1) Adjustment of suck-back time

Adjust the time by speed controller SC-5 and SC-6. (Refer to basic piping diagram on page 13.)

2) Adjustment of suck-back volume

(1) Turn lock nut of suck-back unit to clockwise direction to loosen it.

(2) Adjust suck-back volume by turning adjusting dial checking the status of liquid at discharge end.

(3) Fix stroke length adjusting dial by turning lock nut to counter-clockwise after the adjustment was finished.

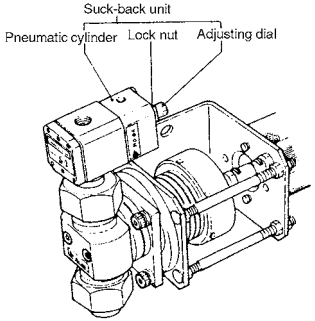

Maintenance

1. Troubleshooting

Trouble	Cause	Countermeasure
Liquid drops at discharge end.	• Wrong adjustment of suck-back unit • Residual pressure in pipe and filter • Suck-back unit/ shut-off valve	• Re-adjust. • Install shut-off valve before suck-back unit. • Re-adjust operating speed with adjusting dial.
Bubbles in photo-resist	• Dissolved N2 • Bubbles is generated because of cavitation.	• Examine N2 pressurizing system. • Slow down pump speed.
Bubbles stay in discharge piping.	• Unsuitable piping • Air locking (Filter)	• Study again piping system. • Open “Vent” of filter to release pressure.
Pump does not start.	• Discharge side pipe is closed. • Too low air pressure	• Open “shut-off valve” etc. • Set pressure more than “minimum operating pressure” of solenoid valve.
Discharge capacity decreased. Pump speed slowed down.	• Clogged filter • Worm pneumatic cylinder bearing	• Replace filter element. • Re-adjust pump speed. • Replace pneumatic cylinder.

Trouble	Cause	Countermeasure
Unstable discharge capacity	• Primary side of filter is air locked. • Failed vent valve of filter	• Release air lock of filter. • Re-adjust vent valve.
Bubbles are generated from shut-off valve/ suck-back unit.	• Diaphragm of suck back unit moves too quickly.	• Re-adjust speed controller to slow down diaphragm movement.
Knocking pneumatic cylinder	• Too choked speed controller	• Re-adjust speed controller aiming at 1 cc/sec.
Unsuitable suck-backed volume	• Wrongly adjusted suck-back valve • Too high viscosity of photo-resist	• Re-adjust to suitable volume. • Replace suck-back unit by high viscosity type.
Liquid leaks.	• Damaged sealing parts • Damaged bellows • Leakage through joint	• Replace sealing parts. (Note) • Replace bellows. (Note) • Tighten joint.
Switch does not work.	• Worn switch contact • Melted contact due to excessive current, voltage	• Replace switch. • Replace pneumatic cylinder. • Resolve reason of excessive current, voltage.

Note : Replacement is done by IWAKI.

⚠ Warning

- ***Power off***

Switch off main power when pump is disassembled and assembled or maintenance works are done. Display a sign "WORKING" so that someone can not switch on the power by mistake when workings are done. Switching on by mistake will cause person injury.

- ***Wear protector***

Liquid remains in pump and piping. Wear protectors such as safety gloves, spectacles etc. when works are done. Also ventilate the working site.

2. Maintenance and inspection

Pay attention to following items while pump is running. Stop pump when any abnormality is found and take countermeasures referring to the item "Troubleshooting" on page 18.

No.	Check item	Description & countermeasures
1	If liquid is pumped normally.	• If liquid is pumped. • If suction and discharge pressure is normal. • If liquid is not deteriorated, crystallized nor sticks.
2	If liquid does not leak from jointed parts or piping or air is not sucked in.	• Re-tighten the leaking parts. • If you find many bubbles in discharged liquid, air is sucked in liquid. Check piping and re-tighten leaking parts.

3. Consumable parts

Following parts are consumable parts. To use the pump without trouble for a long time, replace these parts at the life time shown on the table.

No.		Parts		Q'ty	Life time
SB-2 to 5	SB-6				
9	16	Ball valve		4	10,000 hrs
3	15	Valve gasket		10	
5	14	Valve seat	SB-2,3,4,6 SB-4K,5	4	
15	18	Bellows		1	
24	31	Pneumatic cylinder		1	5,000 hrs

Note 1. Parts No. shown above is in accordance with No. in drawings on page 8 to 11.
2. Bellows and pneumatic cylinder are replaced by IWAKI.
3. Life time shown as above is based on pumping clear water at ambient temperature and it depends on the pumped liquid and other conditions.
4. Valve gasket must be replaced every time when pump is disassembled regardless of the life time mentioned above.

EC DECLARATION OF CONFORMITY

A copy of the original Declaration of Conformity

(SUPPLIER'S NAME)
WE
IWAKI CO.,LTD.

(ADDRESS)
6-6 2-CHOME KANDA-SUDACHO CHIYODA-KU TOKYO JAPAN

(PRODUCT)
DECLARE UNDER OUR SOLE RESPONSIBILITY THAT THE PRODUCTS
PNEUMATIC DRIVE BELLOWS PUMP

(MODEL NAME)
SB SERIES

TO WHICH THIS DECLARATION RELATES ARE IN CONFORMITY
WITH THE FOLLOWING STANDARDS OR DIRECTIVES AS FAR AS APPLICABLE

(DIRECTIVES)
MACHINERY DIRECTIVE 2006/42/EC (ANNEX IIA)
RoHS DIRECTIVE 2011/65/EU

(STANDARDS)
EN ISO12100: 2010 EN IEC63000: 2018
EN809: 1998 + A1: 2009

(A PERSON WHO IS AUTHORISED TO COMPILE THE TECHNICAL FILE
IN THE COMMUNITY)
IWAKI EUROPE GMBH
SIEMENSRING 115 D-47877 WILLICH GERMANY

NOTE: THIS DECLARATION BECOMES INVALID IF TECHNICAL OR OPERATIONAL MODIFICATIONS ARE INTRODUCED WITHOUT THE MANUFACTURER'S CONSENT.

T. Sawada.

Tokyo, Nov 1, 2022

TSUTOMU SAWADA
SENIOR GENERAL MANAGER, QUALITY ASSURANCE HEAD OFFICE

(PLACE AND DATE OF ISSUE) **(NAME AND SIGNATURE OR EQUIVALENT MARKING OF AUTHORIZED PERSON)**

DOCUMENT NO. IS-51K-543-3

Waste Electrical and Electronic Equipment (WEEE)

In accordance with the European Directive 2012/19/EU on waste electrical and electronic equipment, this product features the crossed-out wheelie bin symbol. When this product is disposed of in household wastes, toxic components included in it can cause major environmental and human health problems. Use appropriate waste collection systems for recovery and recycling. Contact your local distributor or nearest Iwaki company for the detailed collection systems.

https://www.iwakipumps.jp
IWAKI CO.,LTD. 6-6 Kanda-Sudacho 2-chome Chiyoda-ku Tokyo 101-8558 Japan
TEL: +81 3 3254 2935 FAX: +81 3 3252 8892

European Headquarter / IWAKI Europe GmbH
TEL: +49 2154 9254 0 FAX: +49 2154 9254 48
Germany / IWAKI Europe GmbH
TEL: +49 2154 9254 50 FAX: +49 2154 9254 55
The Netherlands / IWAKI Europe GmbH (Netherlands Branch)
TEL: +31 74 2420011 FAX: +49 2154 9254 48
Italy / IWAKI Europe GmbH (Italy Branch)
TEL: +39 0445 561219 FAX: +39 0445 569088
Spain / IWAKI Europe GmbH (Spain Branch)
TEL/FAX: +34 934 741 638
Poland / IWAKI Europe GmbH (East Europe Branch)
TEL: +48 12 347 0755 FAX: +48 12 347 0900
Belgium / IWAKI Belgium N.V.
TEL: +32 13 670200 FAX: +32 13 672030
Denmark / IWAKI Nordic A/S
TEL: +45 48 242345
Finland / IWAKI Suomi Oy
TEL: +358 10 201 0490

France / IWAKI France S.A.
TEL: +33 1 69 63 33 70 FAX: +33 1 64 49 92 73
Norway / IWAKI Norge AS
TEL: +47 23 38 49 00
Sweden / IWAKI Sverige AB
TEL: +46 8 511 72900
U.S.A. / IWAKI America Inc.
TEL: +1 508 429 1440 FAX: +1 508 429 1386
Argentina / IWAKI America Inc. (Argentina Branch)
TEL: +54 911 6477 4116
Brazil / IWAKI Do Brasil Comercio De Bombas Hidraulicas LTDA.
TEL/FAX: +55 19 3244 5900
Singapore / IWAKI Singapore Pte Ltd.
TEL: +65 6316 2028 FAX: +65 6316 3221
Indonesia / IWAKI Singapore (Indonesia Office)
TEL: +62 21 6906606 FAX: +62 21 6906612
Malaysia / IWAKIm SDN. BHD.
TEL: +60 3 7803 8807 FAX: +60 3 7803 4800

Australia / IWAKI Pumps Australia Pty Ltd.
TEL: +61 2 9899 2411 FAX: +61 2 9899 2421
China (Hong Kong) / IWAKI Pumps Co., Ltd.
TEL: +852 2607 1168 FAX: +852 2607 1000
China (Guangzhou) / GFTZ IWAKI Engineering & Trading Co., Ltd.
TEL: +86 20 84350603 FAX: +86 20 84359181
China (Shanghai) / IWAKI Pumps (Shanghai) Co., Ltd.
TEL: +86 21 6272 7502 FAX: +86 21 6272 6929
Korea / IWAKI Korea Co., Ltd.
TEL: +82 2 2630 4800 FAX: +82 2 2630 4801
Taiwan / IWAKI Pumps Taiwan Co., Ltd.
TEL: +886 2 8227 6900 FAX: +886 2 8227 6818
Thailand / IWAKI (Thailand) Co., Ltd.
TEL: +66 2 322 2471 FAX: +66 2 322 2477

T479-7 '23/12